We challenged year 9 CSG students to learn about designing and branding a new product.

Students identified a target audience, researched marketing strategies and the importance of having a USP (unique selling point).

Once they had their brand concept they designed and 3D printed their unique biscuit cutters. To prepare their pitches they also created a package design and brand identity.

We were truly blown away by the fantastic teamwork and articulate delivery of the pitches. Our year 9s could take on Sir Alan Sugar' candidates any day!

Here is a selection of their product pitches:

Brief: Design, make and market a brand new premium biscuit using 3D printing technology

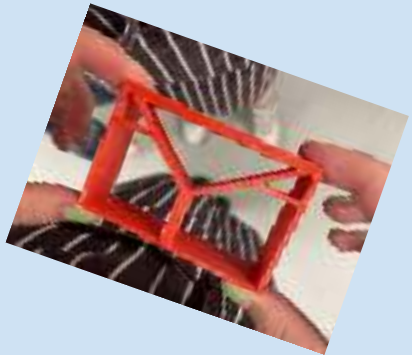

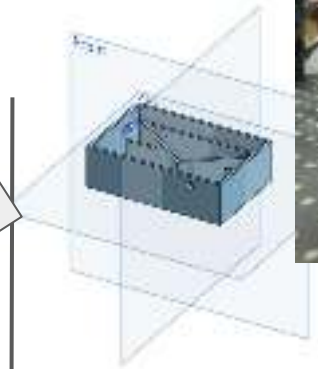

Travel the world with tasty in an envelope!

Delicious biscuit for tiny travellers! Non-sticky and perfect size to carry in your bag for adventures! Only £2 for a packet of 12!

Mrs Delicious

11 Tasty Lane

Yummyland

T4 5TY

AROUND THE WORLD BITES

By Jennah and Nazmin

Purrfect Biscuits

Biscuit cutter

In the shape of a paw

Identity/ USP

We are Purrfect Biscuits! Our brand target audience are children and cat lovers. As you can see this brand specializes in cats! USP is that our cute designs which is appealing to children!B The biscuit

Biscuit box

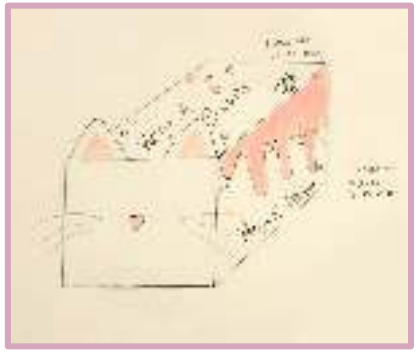

Biscuit

Box containing 6 shortbread biscui
with pink or white icing.
Ingredients: Flour, caster sugar and unsalted butter. Icing

welcome to munchkin farms (◕‿◕✿) !

we have exciting packaging for children and two flavours per biscuits for more choice ! it’s cute, gender-neutral and does not contain any junk that will go straight to landfill… it’s the perfect biscuit for you and your little munchkins !

biscuits come in packs of 4 with flavoured bowtie with icing (carrot and pumpkin, chocolate, apple, orange) so you can share or eat them all yourself !

／(･x･)＼

U=･ x ･=U

There are no healthy yet yummy biscuits for children on the market that aren’t gingerbread !

☆Crunch☆ ☆Munch☆ ☆Gobble !☆

／(･x･)＼

Strawberry Sweet

These are sugar cookies with cream filling and strawberry flavoured icing !!

We chose this design because of its fun, cute and on trend aesthetic. It is aimed for all ages but we think a child would enjoy the sweet and fruity flavours of our cookie. Our box would be a square box filled with the biscuits and decorated with a pink, red and brown background to keep to the strawberry theme.

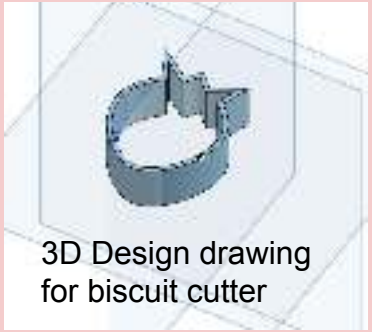

3D Design drawing for biscuit cutter

Packaging

❀ Blooms ❀

Colours: blue, pink, yellow/gold
Slogan: Summer picnic in your pocket

For students, young adults, people in general who don't have much money.

Flowers, ribbons and gold themes makes it the perfect gift for birthdays, mothers day etc and work parties that looks posh but you can find in the supermarket ❀ ❀ ❀

Packaging design

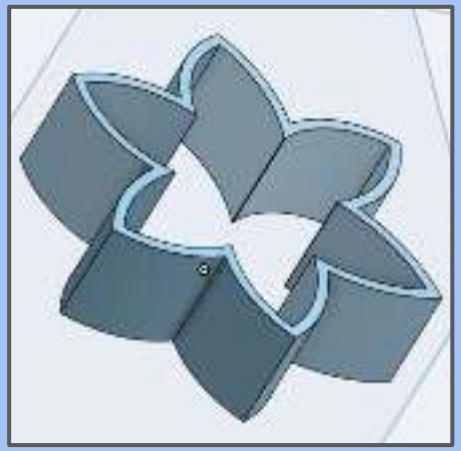

RECIPE:https://www.bbc.co.uk/food/recipes/icedbiscuits_3054
unsalted butter, caster sugar, eggs, flower extract, plain flour

My final product made using flower biscuit cutter and an iced biscuit recipe will appeal to my audience and makes a perfect mothers day, birthday or thank you gift.

Cost to make is £1.69 for 24 biscuits>

£0.07 per biscuit

Pack of 12 would cost £2.00 in shop to make £1.16 profit

❀ Blooms ❀

Ingredient used	Total amount of ingredient used	÷	Packet weight	x	Cost of ingredient to buy	=	Cost of the amount of the ingredient used
Unsalted butter	100g	÷	250g	x	£1.85	=	£0.74
Caster sugar	100g	÷	500g	x	£1.10	=	£0.22
Eggs	1	÷	6	x	£1.10	=	£0.18
Flower extract	1 tsp / 5 ml	÷	60ml	x	£1.90	=	£0.16
Plain flour	275g	÷	1kg	x	£1.40	=	£0.39
							Total cost: **£1.69**

Target Audience & USP

This biscuit is made for young children who do not like taking medication or vitamins in the form of pills. You would be able to get medical prescriptions to these biscuits from pharmacies or doctors.

The packets of these biscuits also contain a small decorating kit which includes small tubes of icing and chocolate chips so that the children can have fun decorating their VitaMen™.

Packaging

The packaging will be fun and vibrant in colour so it stands out in the pharmacies.

The ingredients and details about the custom prescription will be written on the back along with some random facts to read when you're bored.

GINGER DIPPERS

Brand Identity: name/logo/colours/slogan and reasons for choices.

Ginger Dippers,
they're are an elongated circular shape and come with a buttercream dip,
they are aimed at anyone but mostly young kids as they are quite sweet,
They are good for journeys or to have on the go.

The logo is the name 'Ginger Dippers' with the 'I's as the biscuits.
The motto at the bottom is 'Don't Think Just Dip'. On the back it has all the ingredients.

Final design concept
3D printed cutter
Biscuit recipe and photo of biscuit

Evaluation - Pitch the final concept including your marketing strategy/USP

My biscuits were made using a ginger biscuit recipe. Each pack is priced at £1.65 with each biscuit being worth 12.8p.bc

Brand identity: name/logo/colours/slogan and reasons for choices

FLOWER POWERS

The colours are pinks, yellows, blues and greens

Light colours because they relate to flowers
I want them to be fresh, spring like and fun
For vegans and people willing to try
Vegan biscuits,

FLOWER POWERS

packaging

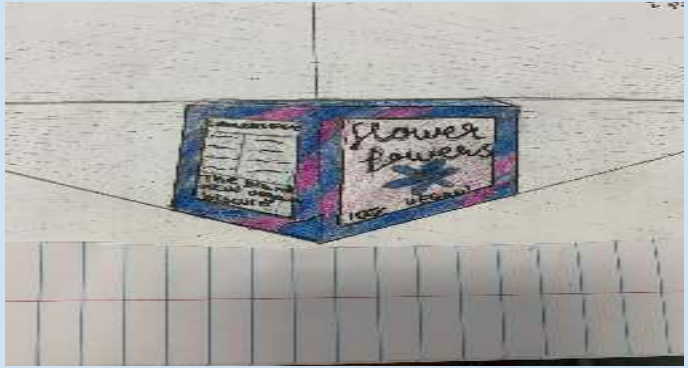

Final design concept
3D printed cutter
Biscuit recipe and photo of biscuit

Plain flour, granulated sugar, vegan spread, baking powder, lemon zest, vanilla extract

My final products are 6 flower shaped vegan biscuits with a vegan sugar cookie recipe, the colours are pink as I wanted them to be friendly, inviting and fresh, they are iced and have a soft lemon flavour. I wanted the design to be for vegans and younger vegans who like flowers and these specific colours,it is an easy shape to eat for at home and on the go..

Premium Biscuit Final Product

Blossoms

Colours-pink,white,purple and red

Made for aesthetics, perfect for pictures.

Designed for late teens to young adults for posting afternoon teas with blossoms.each biscuit alluringly designed differently. Made with healthy ingredients making it a yummy and well made biscuit Drizzled in a delicate white chocolate with a crumbly vanilla biscuit when it enters your mouth

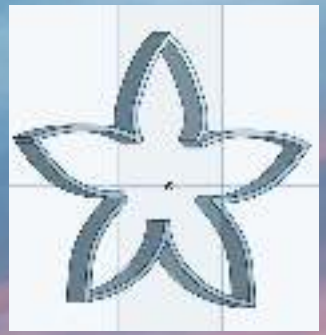

These are one of our 4 designs. Beautifully decorated for your wellbeing

We will put 4 differently designed biscuits in a packet making them delicious gift biscuits you can give to your loved ones.

INGREDIENTS

-Butter (unsalted) (softened)
100g
-Unrefined Golden Caster sugar
100g
-Egg(s) (free range)
0.5 tsp
- Vanilla Extract
200g
Mixed flour
0.5 tsp
- Baking powder
0.5 tsp
-Salt
- Rose Water

9p a biscuit... what a teabargain...!

Tealicious Biscuits

Tealicious biscuits are great for adults to nibble on with your friends and a cup of tea after a long day!!

BISCUIT BOX

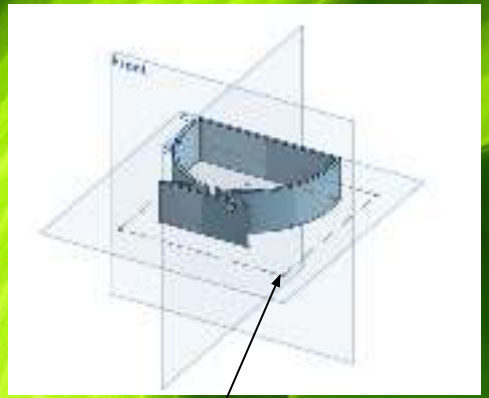

3D DESIGN

My final product made using my teacup biscuit cutter and a ginger biscuit recipe is tealicious!!!! The simplicity of the decoration brings out the taste of the ginger and syrup flavours!

That's Tealicious for you!

LOGO

We chose greens and yellows to represent nature

INGREDIENTS
Butter, flour, brown sugar, bicarbonate of soda, golden syrup, ground ginger

Mr. Munch

Brand identity: name/logo/colours/slogan and reasons for choice

Mr. Munch brings a boost of happiness and vibrancy whilst still maintaining a healthy lifestyle!

Too Munch fun!

Packaging design

Final design concept 3D printed cutter
Biscuit recipe and photo of biscuit

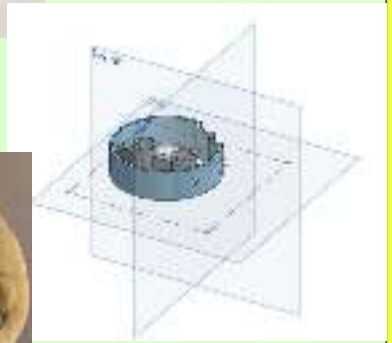

Evaluation - Pitch the final concept including your marketing strategy/USP

My product is targeted for young children as an after school snack that they can cherish and it is a healthy alternative to other biscuits which may contain high amounts of sugar and harmful chemicals!

burgundy for cranberries

green for seeds

Shaped like a sunflower seed

- Biscuit packaging

By Cora and Lamia

Mini Moons

Our biscuits are the phases of the moon. They are made for sleepovers and to drink with night time tea.

They are marketed for all ages. Can be eaten at anytime but good for a before bed snack.

Packaging design

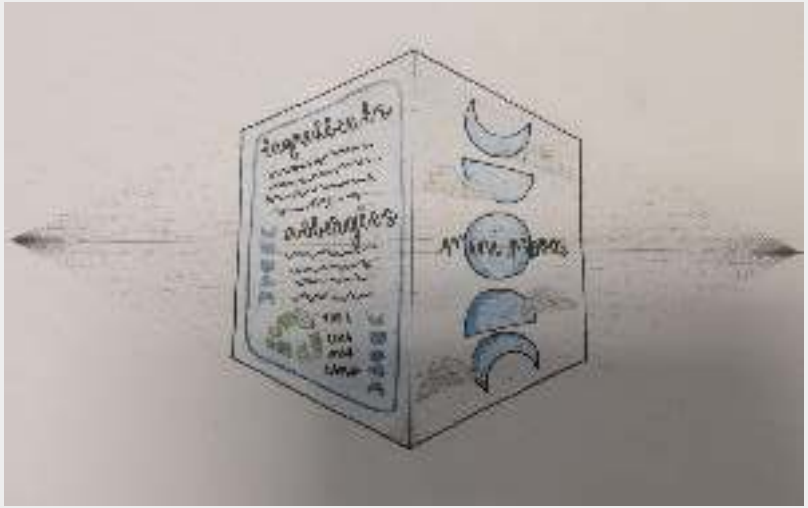

Final design concept
3D printed cutter
Biscuit recipe and photo of biscuit

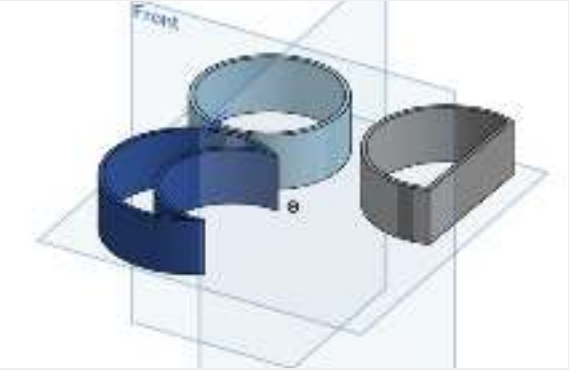

Our visual concept:

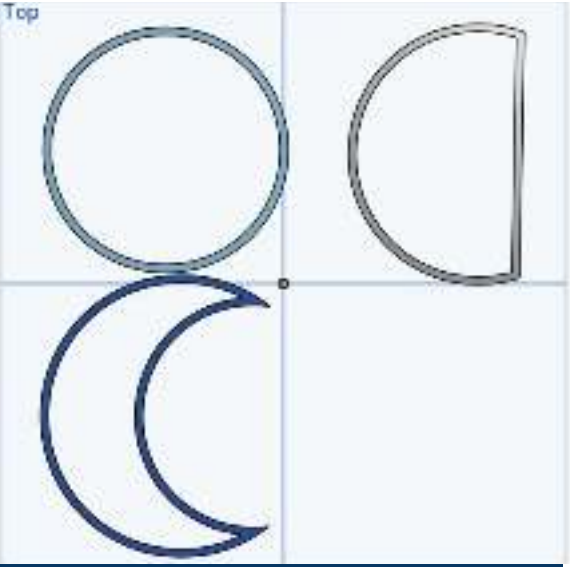

Biscuit cutter and Recipe

1. Preheat the oven to 190C/170C Fan/Gas 5. Line a baking tray with greaseproof paper.
2. Cream the butter and sugar together in a bowl until combined. Beat in the egg and vanilla extract, a little at a time, until well combined. Beat in the egg and vanilla extract, a little at a time, until well combined, then stir in the flour and bring together to form a dough.
3. Roll the dough out on a lightly floured work surface to a thickness of 1cm/½in. Using biscuit cutters, cut biscuits out of the dough and carefully place onto the baking tray.
4. Bake for 8-10 minutes, or until pale golden-brown. Set aside to harden for 2 minutes, then cool on a wire rack.

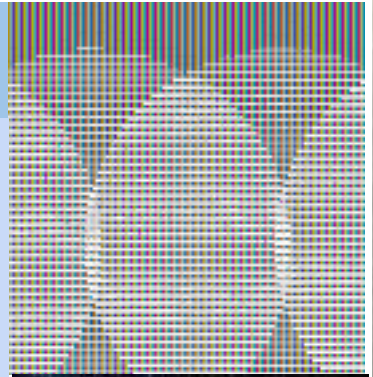

Ingredients:

- 100g unsalted butter
- 100g caster sugar
- 1 egg
- 1 tsp vanilla extract
- 275g plain flour
- 200g milk chocolate
- 200g white chocolate

By Chen-Chen

Purple, green and yellow packaging
Brand name: So Matcha! (Shortbread)

Advertisement background

Final design concept

Evalution

My biscuit is a healthy themed (but also a cupcake!) matcha shortbread
It is meant to be a more healthy biscuit, because it has matcha

Packaging design

Butter, flour, sugar and matcha powder

By Grace and Valina

Brand identity: name/logo/colours/slogan and reasons for choices

Name: Froggo n' Friends
Target audience: Animal themed for children

We will have multiple biscuits decorated like different animals including a frog, bear, koala, monkey and more!

Packaging design:

Recipe:

226g butter
200g sugar
1tsp vanilla extract
½ tsp almond extract
1 egg
2tsp baking powder
½ tsp salt
360g flour

Our USP was the different animals you could create with just one cutter.

This is the frog themed biscuit and it is made using the animal head cutter and with a sugar cookie recipe

Premium Biscuit Final Product - Lilly 9T

Brand identity: name/logo/colours/slogan and reasons for choices

Name: Deeds not Words - suffragettes - I chose this name because they are femenist biscuits and ‘deeds not words’ was created by some of the first feminists. I used bright colours for the packaging to make it noticeable

Packaging design:

Final design concept
3D printed cutter
Biscuit recipe and photo of biscuit

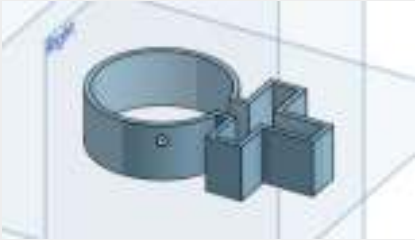

Ingredients:unsalted butter, golden caster sugar, an egg, vanilla extract, plain flour,

Pitch: marketing strategy/USP

Different female icons on the boxes

- fun
-colourful
-appealing
- about gender equality

If i did it again, I would make the join between the circle and the cross thicker so it doesn't break and use a different recipe.

Goldie's Final Biscuit Product

Brand identity: The colours that would be used for packaging light blue, purple, and gold. Primo- biscuits. Although it may not be the most creative name the most important part is the cookies themselves. They are based on a video game currency from the game genshin impact. I believe that the reason people would choose these biscuits is because of the unique design and concept.

Packaging design: The biscuits would be kept in a brown paper bag containing 4 of the biscuits. The bag itself would be sealed with a decorative sticker using the colours mentioned before.

Final design concept
3D printed cutter
Biscuit recipe and photo of biscuit:
-golden caster sugar
-flour
-butter(softened)
-water
-icing sugar
-vanilla extract

Evaluation - Pitch the final concept including your marketing strategy/USP: A USP for my biscuits is that though they may initially be meant for the younger generation, people of any age really can enjoy them, and since they don't use eggs they are also vegan.

chaeyeong

Premium Biscuit Final Product

Brand identity: name/logo/colours/slogan and reasons for choices
Name: Puzzles
Flavor: Lemon biscuits
Aimed for: children, has fun/toy concept.
Packaging: Yellow box as it matches the flavour.

Packaging design

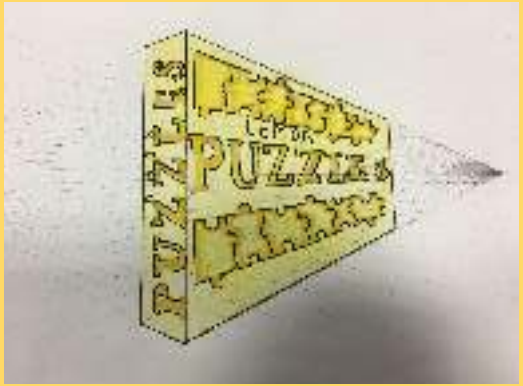

Final design concept
3D printed cutter
Biscuit recipe and photo of biscuit

Unsalted butter, granulated sugar, lemon zest, vanilla extract, flour

Evaluation - Pitch the final concept including your marketing strategy/USP

The final product contains a sweet biscuit if you need a quick snack. The yellow box would be more eye catching on shelves as it is more vibrant in contrast to other colours.

Charlie & Abi

Queen of Hearts biscuits

Name: Queen of Hearts
Colours: Red, black

Our biscuits have dark chocolate and almonds in them because these ingredients help with PMS and period symptoms and cravings.

Packaging design

Our packaging would clearly show the ingredients so people know what they are putting into their bodies. It is a design that should appeal to gen z and millennials.

3D printed biscuit cutter

Evaluation - Our biscuits are designed to satisfy sweet tooths, but also have ingredients that help to alleviate cramps. Dark chocolate is high in magnesium, potassium and iron, all of which help to relax muscles and improve mood. Almonds are high in healthy fats and vitamin E, which helps with pain. Almonds are also high in magnesium. Though these are marketed at people who have periods, they have normal ingredients in them so can be enjoyed by anyone. We would use social media platforms such as instagram and tiktok to market our product.

Premium Biscuit Final Product - Emma

Brand identity: name/logo/colours/slogan and reasons for choices

The name of the biscuit bran is hoops. I used vibrant and bright colours for the package design so that it would stand out on the shelves. The logo is a basketball being thrown into a basketball hoop.

Packaging design

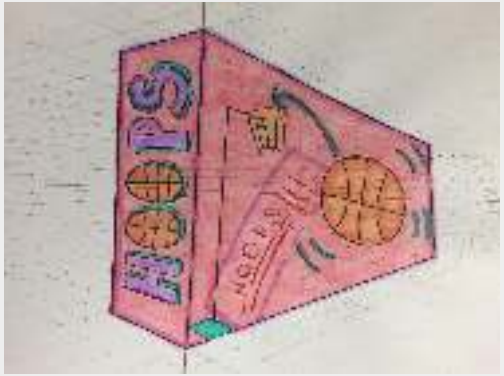

Final design concept
3D printed cutter

Marketing strategy/USP

I used a gingerbread recipe for the biscuits because I wanted to make the biscuits look as similar to actual basketballs as they could be making them sort of orangy-brown.

Perfectly spiced gluten-free ginger snaps

By Taisiya and Tegan

Brand Logo and Packaging

Biscuit Cutter

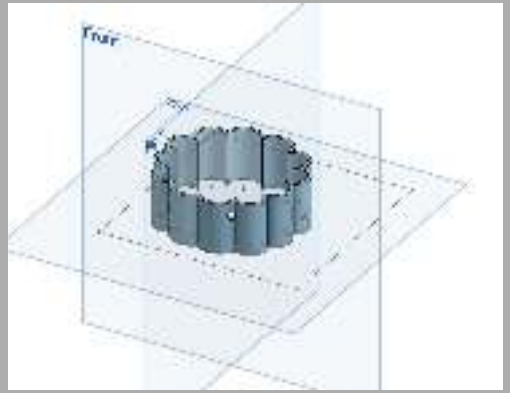

Final result

Perfectly spiced gluten-free ginger snaps

Pitch

A new, cost effective, ecologically safe and gluten free biscuit. Completely organic ingredients, including handmade flour. Especially appealing to those who cannot eat gluten for dietary reasons, and it isn't crumbly it all. It holds its shape and even snaps, perfect for tea dunking.

Ecological footprint

Total of ingredients emission = 889 CO2E (carbon dioxide equivalent)

Percentage of fair daily food emissions = 29.2%

Oven uses 0.5 units (kilowatts/hour)

Costing

Oat Groats = 51p
Butter = 52p
Brown Sugar = 17p
Golden syrup = 3p
Total = £1.23

Evaluation

Combination of flavours worked well. Next time, I would try using fresh ginger for a more natural taste. Although, this would risk it tasting like a curry.

Brand Identity

This biscuit is specially aimed at people with celiac disease or other intolerances, to hopefully open more exciting doors. We draw upon a floral theme to introduce connotations of freshness.